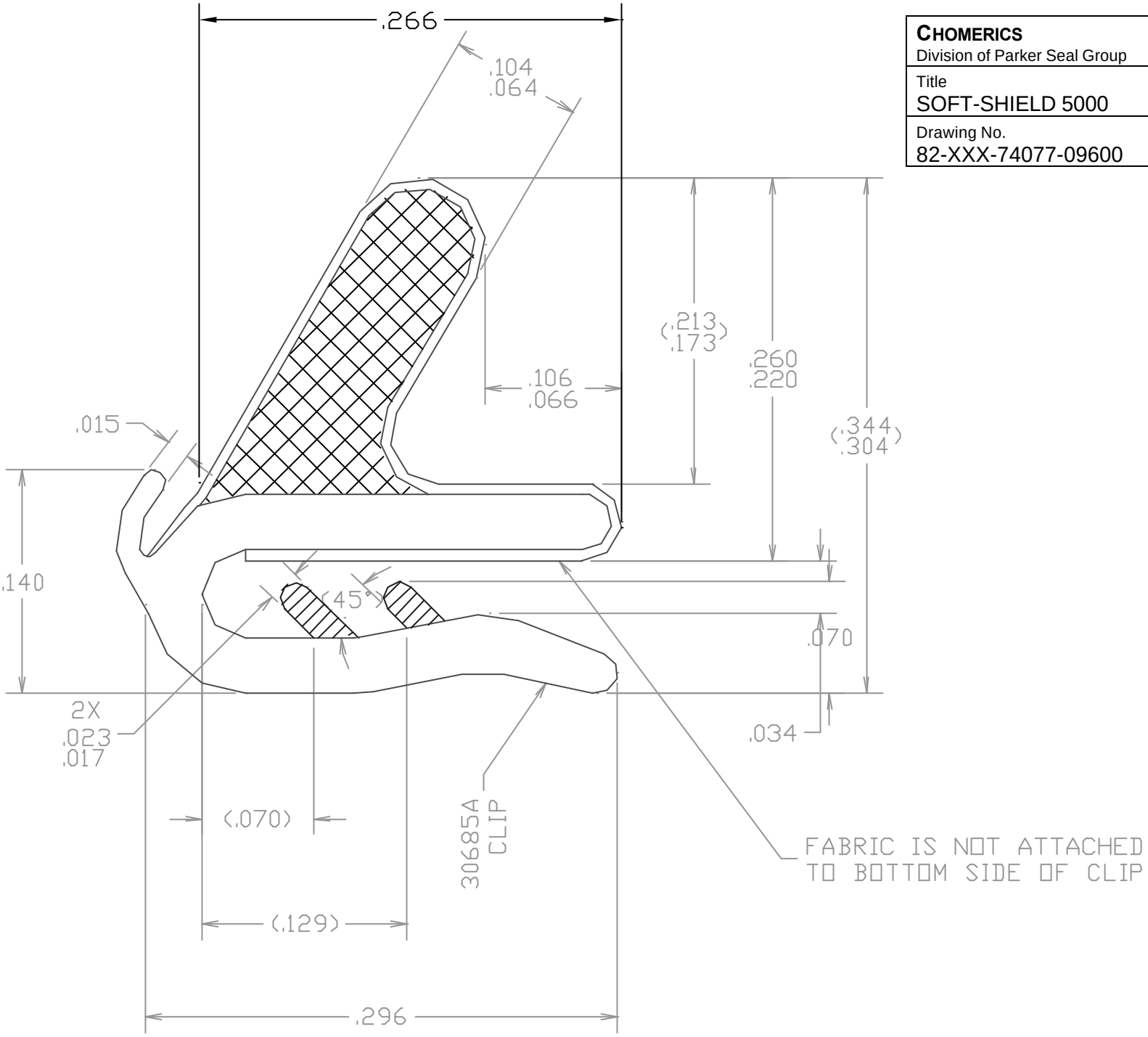CHOMERICS Division of Parker Seal Group
Title SOFT-SHIELD 5000
Drawing No. 82-XXX-74077-09600